PATTERN BATTERY TECHNOLOGY CO., LIMITED
DEEP CYCLE AGM BATTERY
Head office :Room 1409,East Block,Costal Building,Hai De San Dao,Nanshan District,Shenzhen City,CHINA
E-mail: info@patternbattery.com
Web:www.patternbattery.com Office line:+86-755-86524336

PTF-Front Terminal
PTF12-100

Specifications

Rated Voltage		12V
Nominal Capacity	C_{10},1.80V/cell	100.0Ah
Dimension	Length Width Container Height Total Height	508±2mm (20.0 inches) 110±1.5mm (4.33 inches) 238.5±2mm (9.39 inches) 238.5±2mm (9.39 inches)
Approx Weight		31.0 Kg
Terminal		T3
Container Material		ABS
Rated Capacity (25°C)	106.0 Ah 100.0 Ah 87.0 Ah 80.0 Ah 59.0 Ah	(20hr,5.40A,1.80V/cell) (10hr,10.0A,1.80V/cell) (6hr,14.5A,1.75V/cell) (5hr,16.0A,1.75V/cell) (1hr,59.0A,1.65V/cell)
Max. Discharge Current		1000A (5s)
Internal Resistance (25℃)		Approx 4.5mΩ
Operating Temp.Range	Discharge Charge Storage	-15 ~ 50°C (5 ~ 122°F) 0 ~ 40°C (32 ~ 104°F) -15 ~ 40°C (5 ~ 104°F)
Nominal Operating Temp. Range		25±3°C (77±5°F)
Cycle Use	Initial Charging Current less than 30.0A.Voltage 14.1V~14.4V at 25°C(77°F)Temp. Coefficient -30mV/°C	
Standby Use	Initial Charging Current less than 30.0A. Voltage 13.5V~13.8V at 25°C(77°F)Temp. Coefficient -20mV/°C	
Effect of temp. to Capacity	40°C (104°F) 25°C (77°F) 0°C (32°F)	103% 100% 86%
Self Discharge	PTF series battery may be stored for up to 6 months at 25°C(77°F) and then a freshening charge is required. For higher temperatures the time interval will be shorter.	



Layout

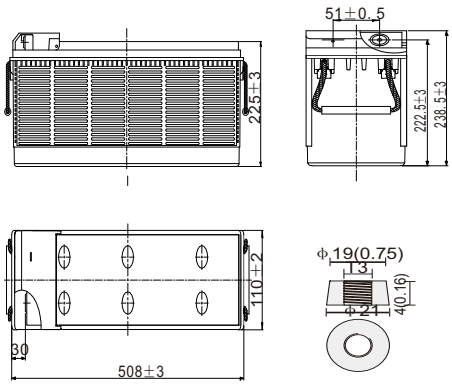

Constant Current Discharge (Amperes) at 25 °C (77°F)

15min	20min	30min	45min	1h	2h	3h	4h	5h	6h	8h	10h	20h	V/cell
110.0	95.0	76.0	58.0	47.0	30.0	23.0	19.0	15.0	13.0	11.0	9.5	5.1	1.85
140.0	113.0	89.0	63.0	53.0	32.0	24.0	20.0	15.5	14.0	12.4	10.0	5.4	1.80
150.0	122.0	93.0	67.0	55.0	33.0	25.0	21.0	16.0	14.5	13.0	10.3	5.6	1.75
160.0	128.0	97.0	71.0	57.0	34.0	26.0	21.8	17.0	15.0	14.5	10.7	5.8	1.70
170.0	135.0	100.0	74.0	59.0	36.0	27.0	22.5	18.0	15.5	15.0	11.1	6.0	1.65
180.0	140.0	105.0	77.0	61.0	38.0	28.0	23.5	19.0	16.5	16.0	11.5	6.2	1.60

Constant Power Discharge (Watts/cell) at 25 °C (77°F)

15min	20min	30min	45min	1h	2h	3h	4h	5h	6h	8h	10h	20h	V/cell
203.5	175.8	140.6	107.3	87.0	55.5	42.6	35.2	27.8	24.1	20.4	17.6	9.5	1.85
252.0	203.4	160.2	113.4	95.4	57.6	43.2	36.0	27.9	25.2	22.3	18.0	9.6	1.80
262.5	213.5	162.8	117.3	96.3	57.8	43.8	36.8	28.0	25.4	22.8	18.0	9.7	1.75
272.0	217.6	164.9	120.7	96.9	57.8	44.2	37.1	28.9	25.5	24.7	18.2	9.8	1.70
280.5	222.8	165.0	122.1	97.4	59.4	44.6	37.1	29.7	25.6	24.8	18.3	9.9	1.65
288.0	224.0	168.0	123.2	97.6	60.8	44.8	37.6	30.4	26.4	25.6	18.4	9.9	1.60

Discharge Characteristics

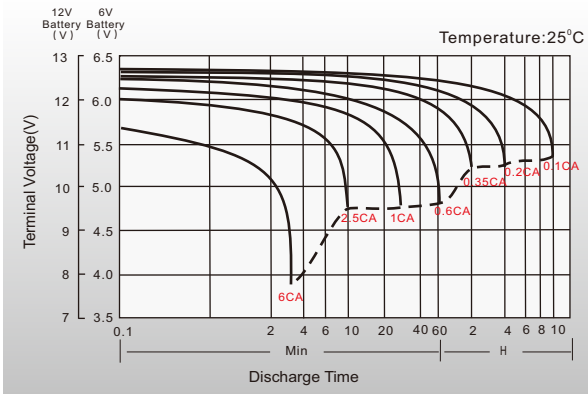

Float Charging Characteristics

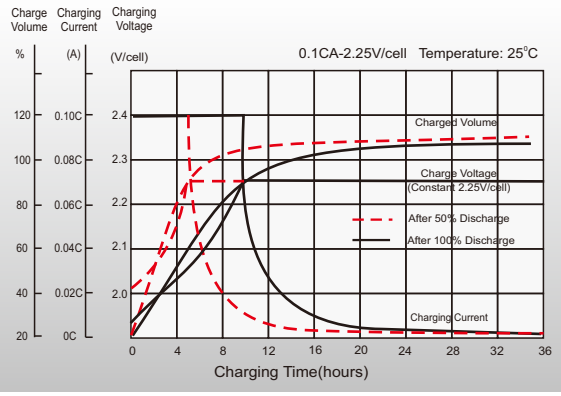

Temperature Effects in Relation to Battery Capacity

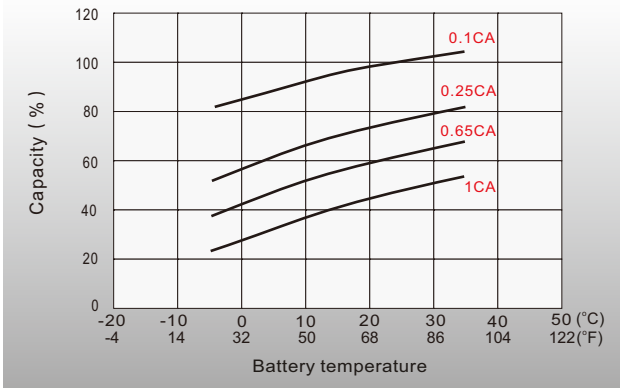

Effect of Temperature on Long Term Float Life

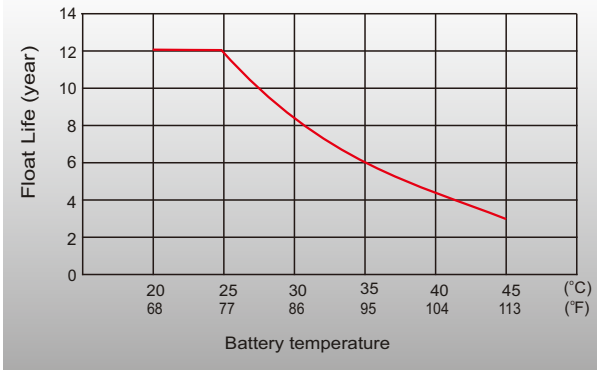

(Note) The above characteristics data are average values obtained within three charge/discharge cycle not the minimum values.

PATTERN BATTERY TECHNOLOGY CO., LIMITED